ECC12 Hub
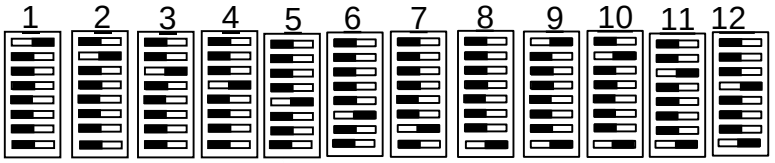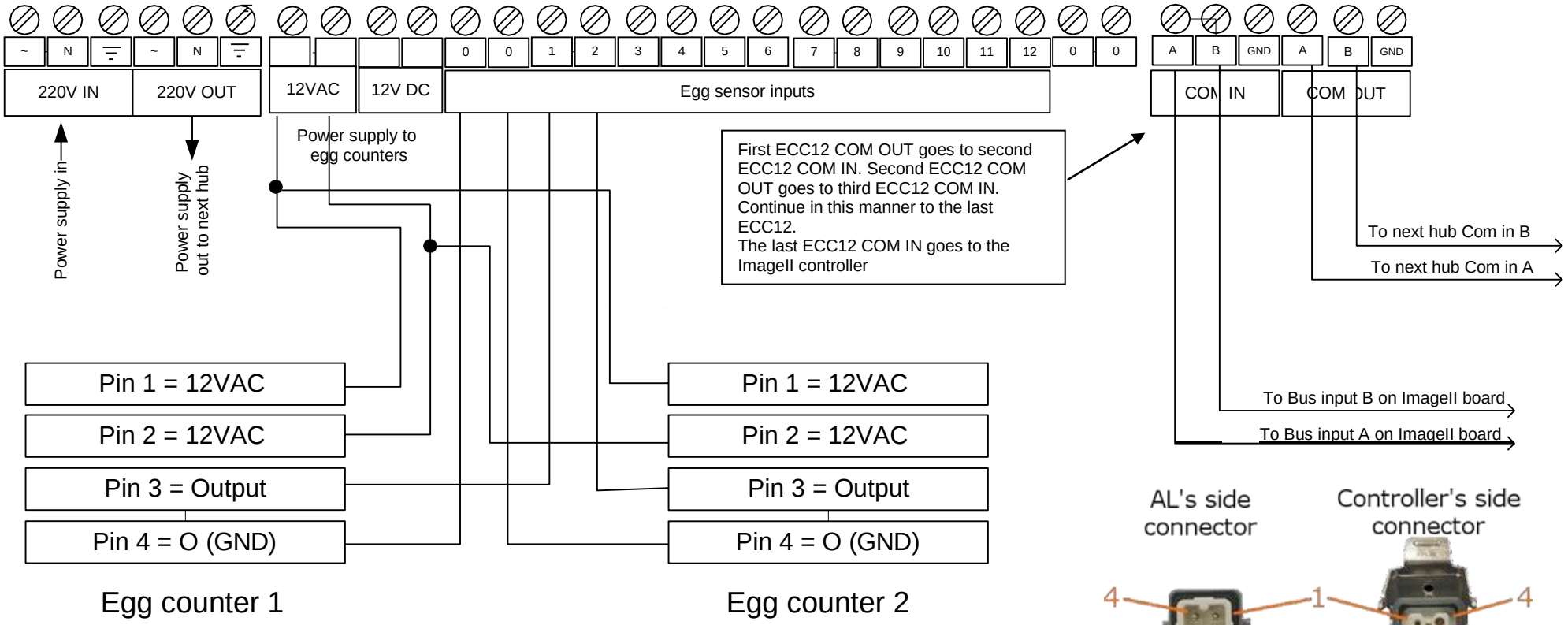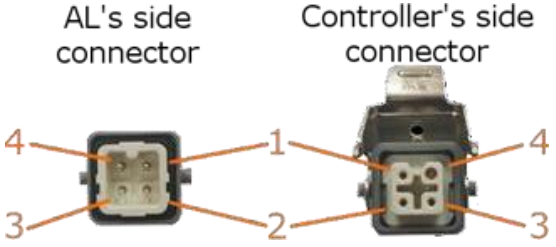
Hub number dip switch setup